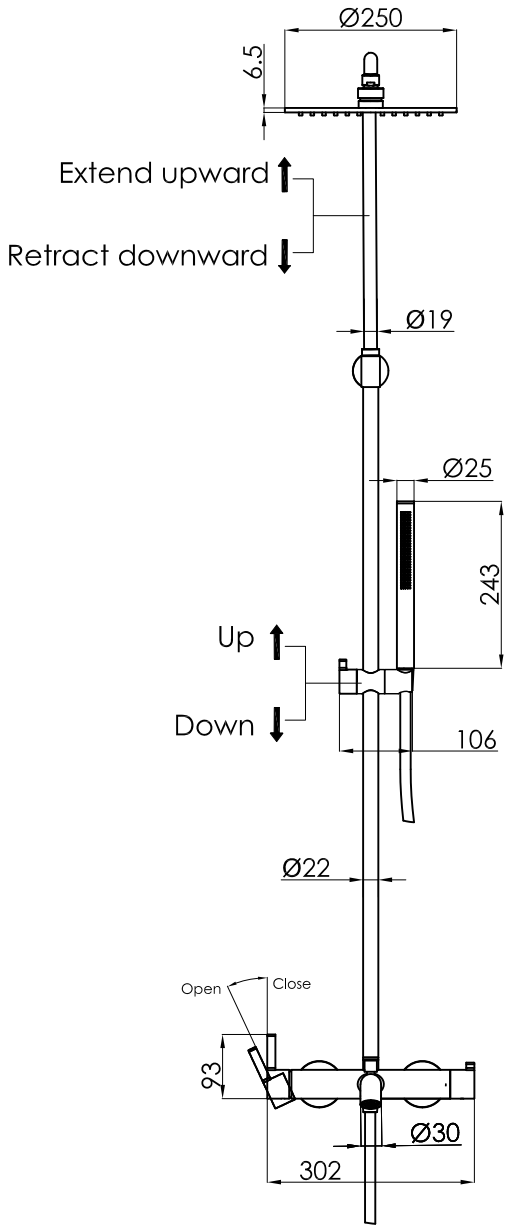
Ø250
6.5
Extend upward
Retract downward
Ø19
Ø25
243
Up
Down
106
Ø22
Open
Close
93
Ø30
302

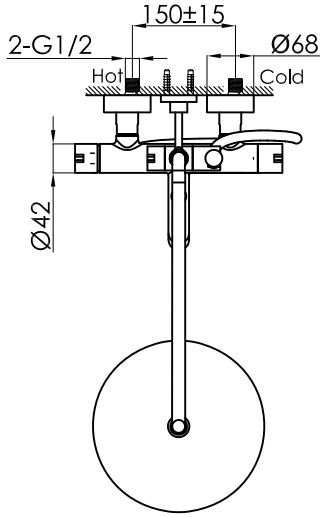
150±15
2-G1/2
Ø68
Hot
Cold
Ø42

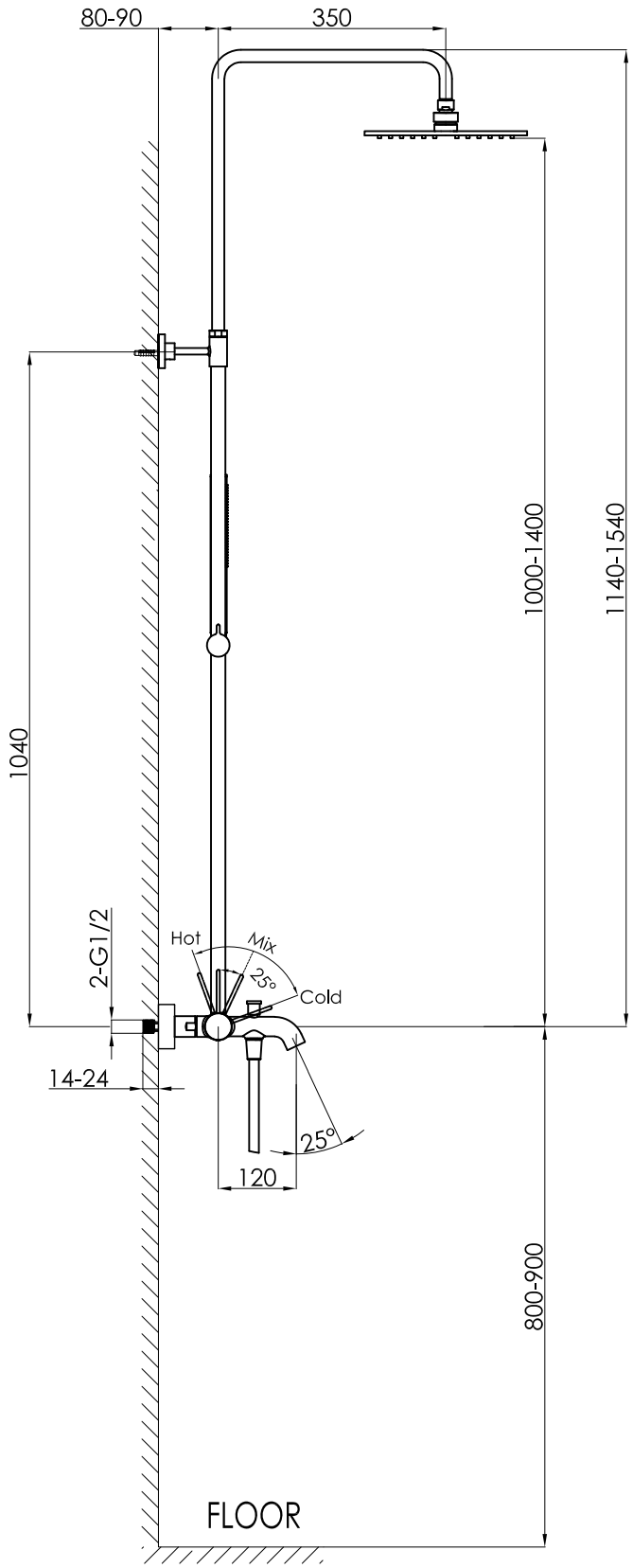
80-90
350
1000-1400
1140-1540
1040
2-G1/2
Hot
Mix
25°
Cold
14-24
25°
120
800-900
FLOOR