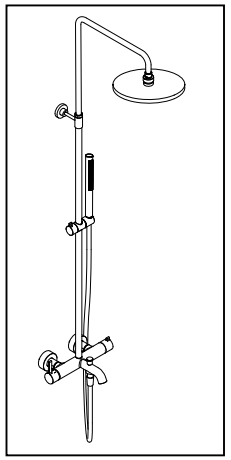

BSQ
BENESQUE

BALANCE. STYLE. QUALITY.

EXPOSED SINGLE LEVER VALVE WITH 3 OUTLETS, ADJUSTABLE RISER, BATH SPOUT, HEADSHOWER(250MM)AND HANDSHOWER

Dimension drawing

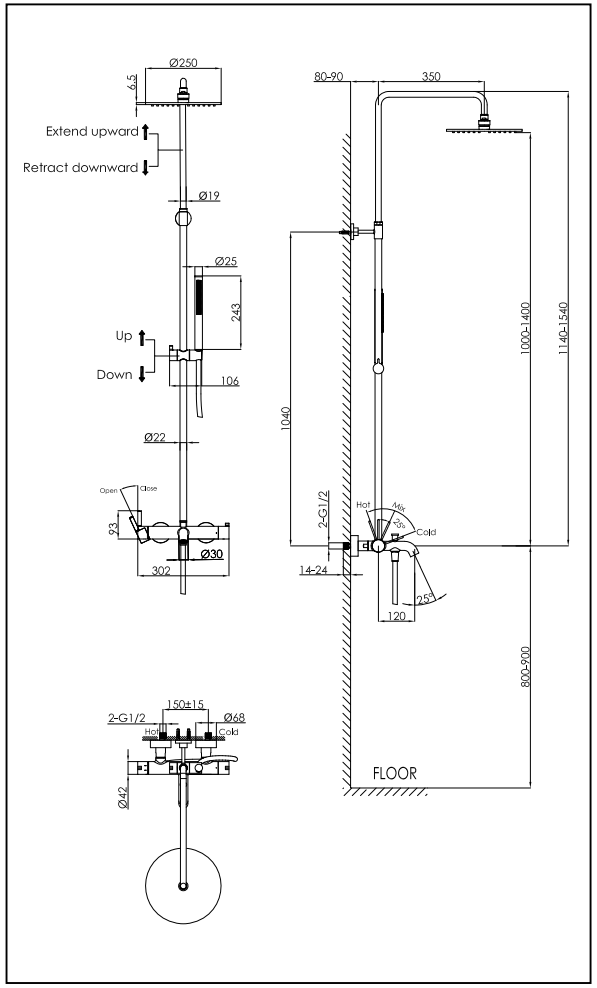

Explosive drawing

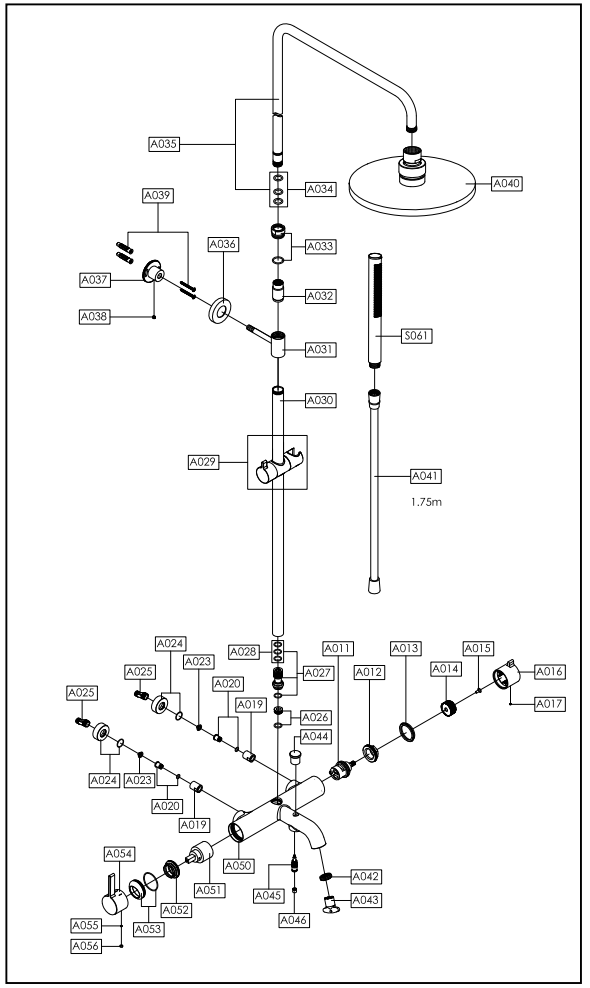

Installation Steps

1

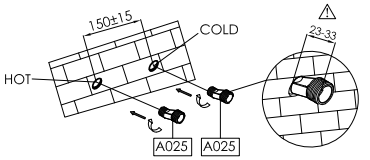

2

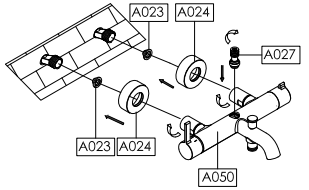

3

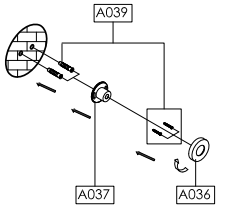

4

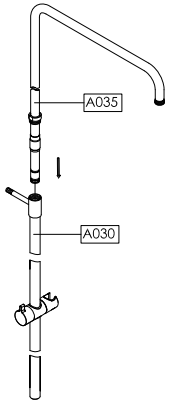

5

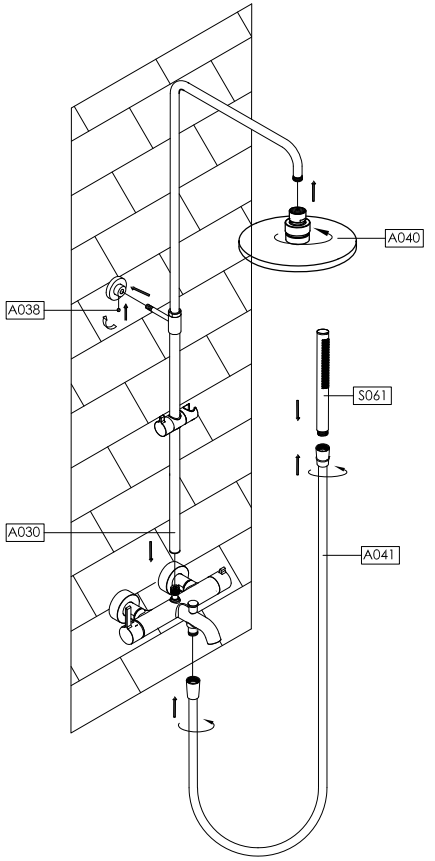
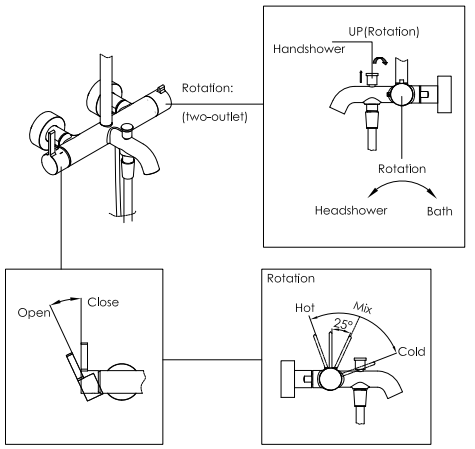
Instruction